Xi'an Jiaotong-Liverpool University
西交利物浦大學

Database: Normalisation

Jianjun Chen

Characteristics of Good DB Designs

- The minimal number of attributes necessary to support the data requirements of the enterprise;
- Attributes with a close logical relationship are found in the same relation;
- Minimal redundancy with each attribute represented only once with the important exception of attributes that form all or part of foreign keys.

What is Normalisation?

- Normalisation is a technique of re-organising data into multiple related tables, so that <u>data redundancy is minimised</u>.

- ER modeling VS. Normalisation:
  - ER diagram is useful when you have detailed database specifications but no existing table design.
  - When you already have a database, but the tables are not well designed, you can use normalisation techniques to improve them.

Problems with Data Redundancy

Staff

staffNo	sName	position	salary	branchNo
SL21	John White	Manager	30000	B005
SG37	Ann Beech	Assistant	12000	B003
SG14	David Ford	Supervisor	18000	B003
SA9	Mary Howe	Assistant	9000	B007
SG5	Susan Brand	Manager	24000	B003
SL41	Julie Lee	Assistant	9000	B005

Branch

branchNo	bAddress
B005	22 Deer Rd, London
B007	16 Argyll St, Aberdeen
B003	163 Main St, Glasgow

VS.

StaffBranch

staffNo	sName	position	salary	branchNo	bAddress
SL21	John White	Manager	30000	B005	22 Deer Rd, London
SG37	Ann Beech	Assistant	12000	B003	163 Main St, Glasgow
SG14	David Ford	Supervisor	18000	B003	163 Main St, Glasgow
SA9	Mary Howe	Assistant	9000	B007	16 Argyll St, Aberdeen
SG5	Susan Brand	Manager	24000	B003	163 Main St, Glasgow
SL41	Julie Lee	Assistant	9000	B005	22 Deer Rd, London

Problems with Data Redundancy

- StaffBranch:
  - The details of a branch (bAddress, in this case) are repeated for every member of staff.

StaffBranch

staffNo	sName	position	salary	branchNo	bAddress
SL21	John White	Manager	30000	B005	22 Deer Rd, London
SG37	Ann Beech	Assistant	12000	B003	163 Main St, Glasgow
SG14	David Ford	Supervisor	18000	B003	163 Main St, Glasgow
SA9	Mary Howe	Assistant	9000	B007	16 Argyll St, Aberdeen
SG5	Susan Brand	Manager	24000	B003	163 Main St, Glasgow
SL41	Julie Lee	Assistant	9000	B005	22 Deer Rd, London

- Staff and Branch:
  - The branch information appears only once for each branch in the Branch relation
  - Only the branch number (branchNo) is repeated in the Staff relation, to represent where each member of staff is located.

Branch

branchNo	bAddress
B005	22 Deer Rd, London
B007	16 Argyll St, Aberdeen
B003	163 Main St, Glasgow

Staff

staffNo	sName	position	salary	branchNo
SL21	John White	Manager	30000	B005
SG37	Ann Beech	Assistant	12000	B003
SG14	David Ford	Supervisor	18000	B003
SA9	Mary Howe	Assistant	9000	B007
SG5	Susan Brand	Manager	24000	B003
SL41	Julie Lee	Assistant	9000	B005

Update Anomalies

- Data redundancy not only increases memory usage, but also leads to update anomalies.
- Let's take StaffBranch for example:
  - Insert anomalies: One cannot add a new branch without the information of a staff in this branch (staffNo is PK).
    - Also, must input the correct branch information every time a new staff is added.
  - Delete anomalies: Deleting the last staff of a branch also deletes the information of that branch.
  - Modification anomalies: To change one branch information, all staffs (rows) in that branch must also be updated.

StaffBranch

staffNo	sName	position	salary	branchNo	bAddress
SL21	John White	Manager	30000	B005	22 Deer Rd, London
SG37	Ann Beech	Assistant	12000	B003	163 Main St, Glasgow
SG14	David Ford	Supervisor	18000	B003	163 Main St, Glasgow
SA9	Mary Howe	Assistant	9000	B007	16 Argyll St, Aberdeen
SG5	Susan Brand	Manager	24000	B003	163 Main St, Glasgow
SL41	Julie Lee	Assistant	9000	B005	22 Deer Rd, London

How to Re-organise Tables?

- The StaffBranch table is better split into the Staff table and the Branch table.
  - We know the answer beforehand.

- What information can help us to redesign tables when we don't know the answer?
  - We can <u>observe the data</u> (see next few slides) in the table and find out the relationship between attributes.
  - Common sense may also help, but be careful when applying common sense!

Queue No. A31
Table type: up to 4

31 People are waiting ahead of you.

A1, A2, A3… A99, A999 -> A1

Observing Table Data

- The staffNo refers to a unique staff member in the real life.
  - There's only one sName for that staffNo, because a person can only have one single name.
  - Similarly, there's only one staff position, one staff salary value, one branchNo and one bAddress for that person. (Assume a staff can only have one position and works in only one branch office)

StaffBranch

staffNo	sName	position	salary	branchNo	bAddress
SL21	John White	Manager	30000	B005	22 Deer Rd, London
SG37	Ann Beech	Assistant	12000	B003	163 Main St, Glasgow
SG14	David Ford	Supervisor	18000	B003	163 Main St, Glasgow
SA9	Mary Howe	Assistant	9000	B007	16 Argyll St, Aberdeen
SG5	Susan Brand	Manager	24000	B003	163 Main St, Glasgow
SL41	Julie Lee	Assistant	9000	B005	22 Deer Rd, London

Observing Table Data

- Can we claim the opposite:
  - There's only one staffNo associated with a sName?
  - There's only one staffNo associated with a position?
  - No
- As a result, staffNo has M:1 relationship with
  - sName, position, salary, branchNo and bAddress

StaffBranch

staffNo	sName	position	salary	branchNo	bAddress
SL21	John White	Manager	30000	B005	22 Deer Rd, London
SG37	Ann Beech	Assistant	12000	B003	163 Main St, Glasgow
SG14	David Ford	Supervisor	18000	B003	163 Main St, Glasgow
SA9	Mary Howe	Assistant	9000	B007	16 Argyll St, Aberdeen
SG5	Susan Brand	Manager	24000	B003	163 Main St, Glasgow
SL41	Julie Lee	Assistant	9000	B005	22 Deer Rd, London

Observing Table Data

- The branchNo refers to a unique branch office in the real life.
  - There's only one unique bAddress associated with one branchNo.
- Can we claim the opposite:
  - There's only one unique branchNo associated with one bAddress?
  - Yes
- branchNo has a 1:1 relationship with bAddress.

StaffBranch

staffNo	sName	position	salary	branchNo	bAddress
SL21	John White	Manager	30000	B005	22 Deer Rd, London
SG37	Ann Beech	Assistant	12000	B003	163 Main St, Glasgow
SG14	David Ford	Supervisor	18000	B003	163 Main St, Glasgow
SA9	Mary Howe	Assistant	9000	B007	16 Argyll St, Aberdeen
SG5	Susan Brand	Manager	24000	B003	163 Main St, Glasgow
SL41	Julie Lee	Assistant	9000	B005	22 Deer Rd, London

Observing Table Data

- Can we claim these:
  - A sName is associated with a unique bAddress?
  - A position is associated with a unique salary?
  - A branchNo is associated with a unique position?
  - …
- These attributes are not related in any aspects.

StaffBranch

staffNo	sName	position	salary	branchNo	bAddress
SL21	John White	Manager	30000	B005	22 Deer Rd, London
SG37	Ann Beech	Assistant	12000	B003	163 Main St, Glasgow
SG14	David Ford	Supervisor	18000	B003	163 Main St, Glasgow
SA9	Mary Howe	Assistant	9000	B007	16 Argyll St, Aberdeen
SG5	Susan Brand	Manager	24000	B003	163 Main St, Glasgow
SL41	Julie Lee	Assistant	9000	B005	22 Deer Rd, London

Functional Dependency

A method for finding relationships between attributes within a table

Functional Dependencies

- We want to find <u>relationship between attributes within a table</u> so that we can <u>regroup attributes</u> based on their context and split the big table.
- Introducing **functional dependency (FD)**:

"If A and B are attribute sets of relation R, B is functionally dependent on A (**denoted A → B**), if each value of A in R is associated with exactly one value of B in R."

- A is called **determinant**.

- The concept of FD is closely related to M:1 and 1:1 relationships.

Functional Dependencies

For the attributes below:

PersonalTutors{LecID, LName, LEmail, StudentID, SName}

- We assume each Lecturer has an unique email address (1:1) and several students have one personal tutor (M:1).
- Obvious FDs:
  - **LecID → LName, Lemail**
    Each LecID of a lecturer is associated with exactly one lecturer name and his email address.
  - **StudentID → Sname**
    Given a studentID, you can find that student's name.

Functional Dependencies

- **Other FD considerations:**
  - **LName → LecID**
    Two staffs may have the same name. Thus one name might be associated with two IDs.
  - **StudentID → LecID**
    Given a student id, there will be a personal tutor assigned to him.
  - **LecID → Sname**
    Given a lecturer ID, it is associated with one unique student name? No, a lecturer has many students as personal tutees.
  - **LEmail → LecID, LName**?
    This is another valid FD if email addresses are unique to lecturers.

PersonalTutors{LecID, LName, LEmail, StudentID, SName}

Functional Dependencies

Observe these functional dependencies carefully, you will realise that:

- If these attributes are put together, they can form a relation, with the determinant being the unique key or primary key of the relation.

- For example:
  - <u>LecID</u> → LName, LEmail
  - <u>StudentID</u> → SName, LecID
- Or:
  - LEmail → LecID, LName
  - <u>StudentID</u> → SName, LEmail

PersonalTutors{LecID, LName, LEmail, StudentID, SName}

Functional Dependencies

- However, the FD below is also true:
  - LecID, LName, LEmail → LName, LEmail
- Is (LecID, LName, LEmail) a good primary key?
- Recall the definition of super key, candidate key and primary key.

PersonalTutors{LecID, LName, LEmail, StudentID, SName}

Full and Partial FD

- **Full functional dependency:** If A and B are two sets of attributes of a relation, B is fully functionally dependent on A, if B is functionally dependent on A, but not on any proper subset of A.
  - In other words, determinants should have the minimal number of attributes necessary to maintain the functional dependency with the attribute(s) on the right hand-side.

- **Partial FDs**: $A \rightarrow B$, is a partial FD, if some attribute of A can be removed and the FD still holds
  - Formally, there is some proper subset of A, $C \subset A$, such that $C \rightarrow B$

Examples

- Full functional dependency in the Staff relation:
  - staffNo → branchNo
- How about:
  - staffNo, sName → branchNo?
  - This is a partial dependency since branchNo is also functionally dependent on a subset of (staffNo, sName), namely staffNo.

Staff

staffNo	sName	position	salary	branchNo
SL21	John White	Manager	30000	B005
SG37	Ann Beech	Assistant	12000	B003
SG14	David Ford	Supervisor	18000	B003
SA9	Mary Howe	Assistant	9000	B007
SG5	Susan Brand	Manager	24000	B003
SL41	Julie Lee	Assistant	9000	B005

Determinant in Full/Partial FDs

Determinants in full functional dependencies:

- Will become candidate keys if we split the table

Determinants in partial functional dependencies:

- Will become super keys.

FDs in Normalisation

We only care about full FDs in normalisation. Why?

- Partial FDs results in super keys, if you use a foreign key to refer to a super key in another table, you will need extra columns in the referencing table.
  - branchNo VS (branchNo, bAddress) inside Staff table.
  - Unnecessary!

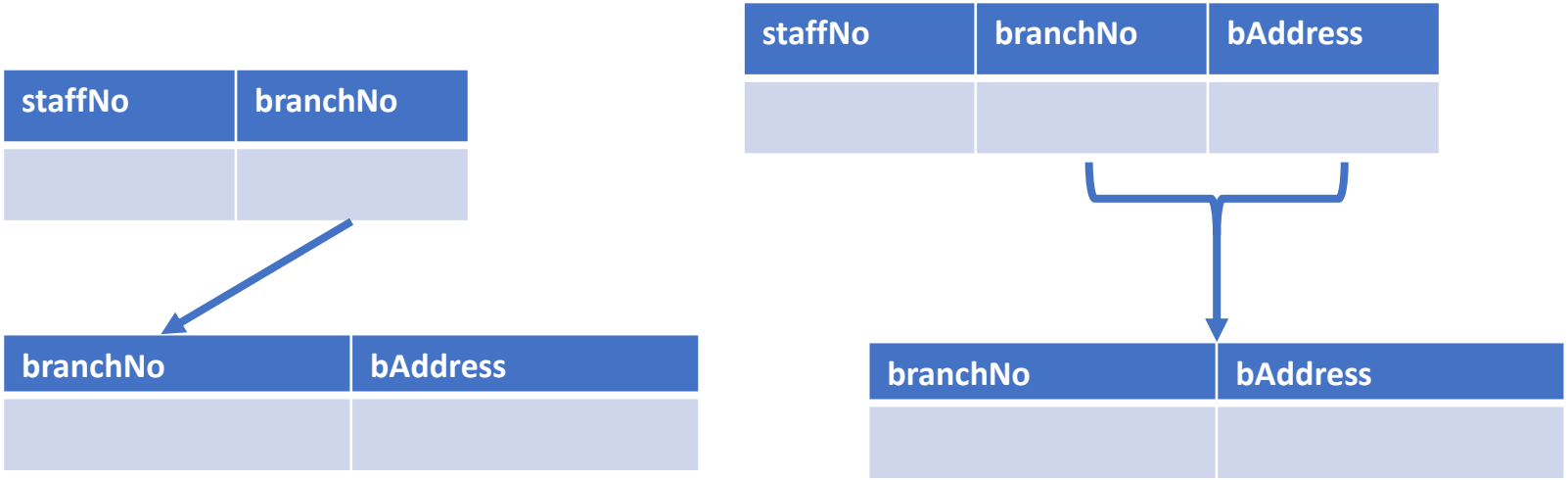

More about Determinants

- If you observe the tuples in the Staff and Branch table, you can find out that the determinant has a M:1 or 1:1 relationship with other attributes in FD.

- Two staff members may have the same name.
  - Thus, one staff name can be associated with more than one staff number. (M:1)
- Two staff members may have the same position.
  - Thus, one position may be associated with more than one staff number (M:1)

Staff

staffNo	sName	position	salary	branchNo
SL21	John White	Manager	30000	B005
SG37	Ann Beech	Assistant	12000	B003
SG14	David Ford	Supervisor	18000	B003

More about Determinants

"The determinant has a M:1 or 1:1 relationship with other attributes in FD"

- Two staffs may work in the same branch.
  - Thus, one branchNo may be associated with more than one staffNo. (M:1)
- A branch address is associated with exactly one branchNo
  - 1:1 relationship

Branch

branchNo	bAddress
B005	22 Deer Rd, London
B007	16 Argyll St, Aberdeen
B003	163 Main St, Glasgow

More about Determinants

"The determinant has a M:1 or 1:1 relationship with other attributes in FD"

- Remember in ER Modelling, M:1 relationships <u>between</u> tables will become foreign keys.

- We can infer that, For attributes that have a M:1 relationships, if they belong to the same context, they will be grouped into one relation, otherwise, they can be split into two tables and linked with a foreign key.

"If they belong to the same context, they will be grouped into one relation, otherwise, they will be split into two tables and linked with a foreign key"

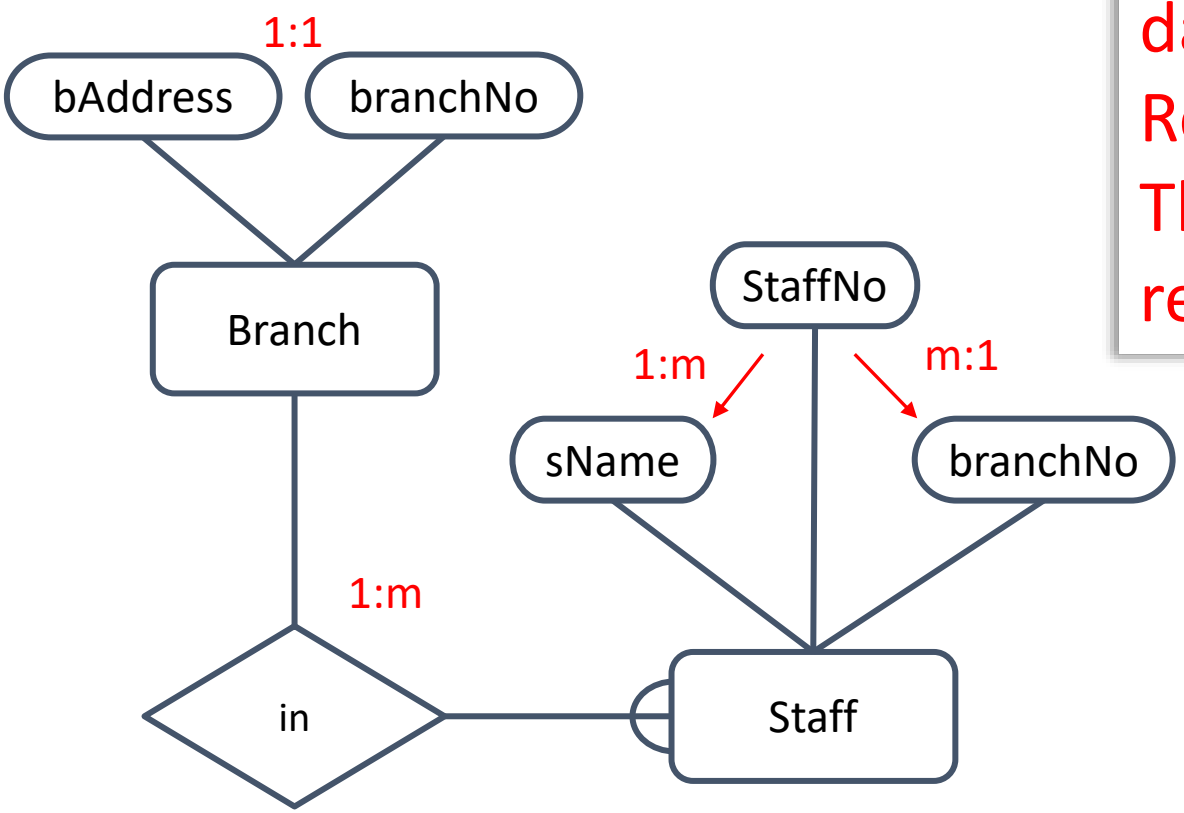

That's why these databases are called Relational databases: They are really about relationships! ☺

Transitive Dependency

1. staffNo → sName, position, salary, branchNo, bAddress
2. branchNo → bAddress

Observe this dependency chain carefully:

- staffNo → branchNo → bAddress
  - This looks like a relationship between staff and branch.

StaffBranch

staffNo	sName	position	salary	branchNo	bAddress
SL21	John White	Manager	30000	B005	22 Deer Rd, London
SG37	Ann Beech	Assistant	12000	B003	163 Main St, Glasgow
SG14	David Ford	Supervisor	18000	B003	163 Main St, Glasgow
SA9	Mary Howe	Assistant	9000	B007	16 Argyll St, Aberdeen
SG5	Susan Brand	Manager	24000	B003	163 Main St, Glasgow
SL41	Julie Lee	Assistant	9000	B005	22 Deer Rd, London

Transitive Dependency

The previous example is a **transitive dependency**.

"Transitive dependency describes a condition where A, B, and C are attributes of a relation such that if A → B and B → C, then C is transitively dependent on A via B (<u>provided that A is not functionally dependent on B or C</u>)."

- Why is the underlined constraint needed? (Explained later)

Normal Forms

How can we use FDs and TDs to redesign tables

The Process of Normalisation

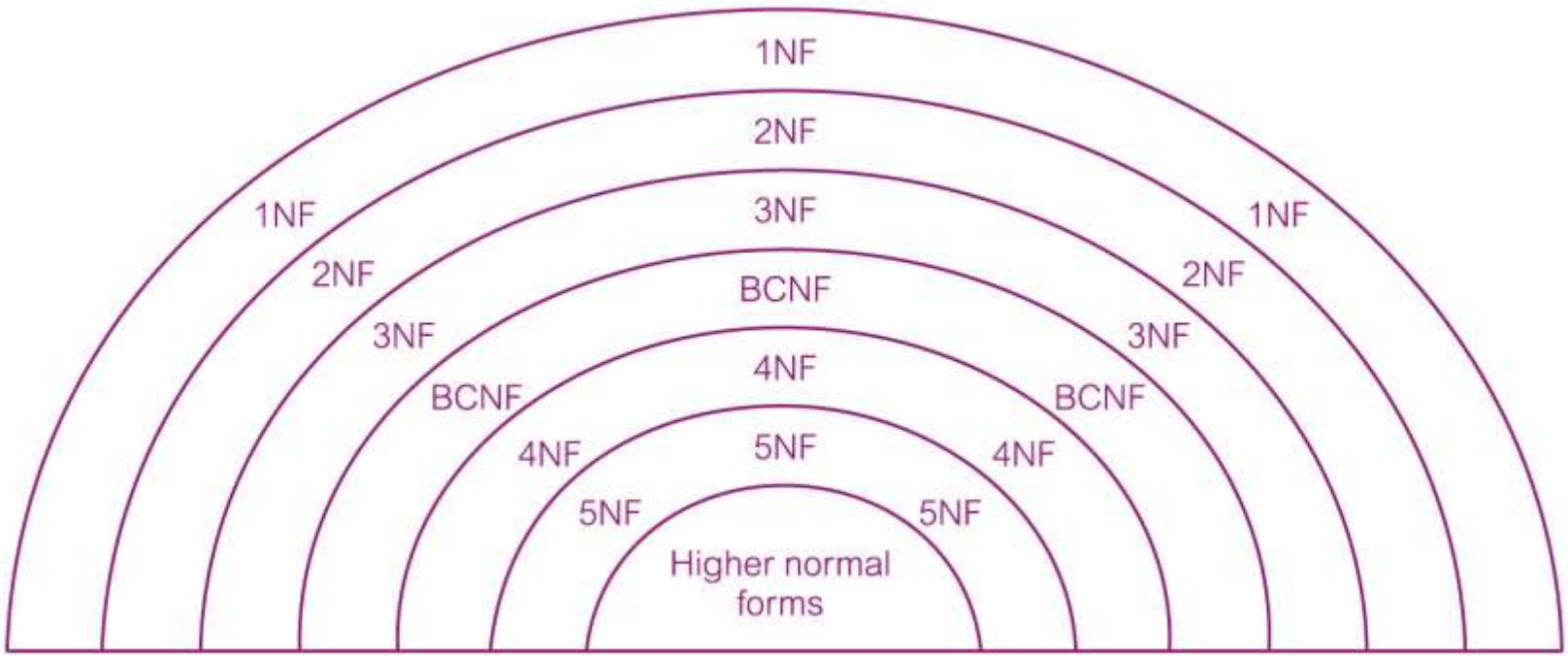

Steps of redesigning tables to make them “suitable”

Normalisation: Some Notes

- In relational database, we always try to assign tables with primary keys (or at least candidate keys).

- Why? Because relational databases are about relations.
  - Attributes within one context forms an entity (table).
  - Primary keys make referencing possible.
  - Attributes connecting entities become foreign keys.
  - Foreign keys form these connections.

- Can I insist that no unique keys are used?
  - Then its beyond the topic of this module :-)
  - Remember, we are learning **one of the possible design decisions** of managing data, don't limit your imagination.

First Normal Form

- In most definitions of the relational model
  - All data values should be atomic
  - This means that table entries should be single values, not sets or composite objects
- A relation is said to be in **first normal form (1NF)**:
  - if all data values are atomic
  - Otherwise, the relation is in unnormalised Form (UNF)

Unnormalised relation

Module	Dept	Lecturer	Texts
M1	D1	L1	T1, T2
M2	D1	L1	T1, T3
M3	D1	L2	T4
M4	D2	L3	T1, T5
M5	D2	L4	T6

Problems With UNF

Look at "Texts" attribute:

- To update the textbook name "T1" to something else, you need to manually update all "T1"s.
- To delete T1 from the pool of textbooks, you need to manually do so, too.
- You cannot add a textbook without giving the information of Module (because it's a Primary Key).

Unnormalised relation

Module	Dept	Lecturer	Texts
M1	D1	L1	T1, T2
M2	D1	L1	T1, T3
M3	D1	L2	T4
M4	D2	L3	T1, T5
M5	D2	L4	T6

Normalise to 1NF

Method 1:

1. Remove the repeating group by entering appropriate data into the empty columns of rows containing the repeating data (also called 'flattening' the table).
2. Assign a new primary/unique key to the new table.

Unnormalised relation

Module	Dept	Lecturer	Texts
M1	D1	L1	T1, T2
M2	D1	L1	T1, T3
M3	D1	L2	T4
M4	D2	L3	T1, T5
M5	D2	L4	T6

1NF

Primary key

Module	Dept	Lecturer	Text
M1	D1	L1	T1
M1	D1	L1	T2
M2	D1	L1	T1
M2	D1	L1	T3
M3	D1	L2	T4
M4	D2	L3	T1
M4	D2	L3	T5
M5	D2	L4	T6

Normalise to 1NF

Method 2:

1. Identify primary/unique key.
2. Place the repeating data along with a copy of the original (unique) key attribute(s) into a separate relation.

Unnormalised relation

Module	Dept	Lecturer	Texts
M1	D1	L1	T1, T2
M2	D1	L1	T1, T3
M3	D1	L2	T4
M4	D2	L3	T1, T5
M5	D2	L4	T6

Primary key

1NFa

Module	Texts
M1	T1
M1	T2

1NFb

Module	Dept	Lecturer
M1	D1	L1
M2	D1	L1
M3	D1	L2
…	…	…

Primary key

Problems in 1NF

- Changing module code from “M1” to something else requires you to check the whole table.
- Adding a new lecturer with no modules and text is impossible.
- If a (department, lecturer) pair is modified, the change must be made to all (Module, Text) pairs.
  - For example, to change (D1, L1) to some other value, you must manually change the first four rows.
- If (M3, T4) is deleted, L2 will be permanently lost!

1NF

Module	Dept	Lecturer	Text
M1	D1	L1	T1
M1	D1	L1	T2
M2	D1	L1	T1
M2	D1	L1	T3
M3	D1	L2	T4
M4	D2	L3	T1
M4	D2	L3	T5
M5	D2	L4	T6

Second Normal Form

- A relation is in second normal form (2NF) if it is in 1NF and no non-key attribute is partially dependent **on the primary key**

- In other words, no C → B where C is a strict subset of a primary key and B is a non-key attribute.

Second Normal Form: Example

Primary key

R

Module	Dept	Lecturer	Text
M1	D1	L1	T1
M1	D1	L1	T2
M2	D1	L1	T1
M2	D1	L1	T3
M3	D1	L2	T4
M4	D2	L3	T1
M4	D2	L3	T5
M5	D2	L4	T6

- We have the FD:

{Module, Text} →{Lecturer, Dept}

- But also

{Module} → {Lecturer, Dept}

- And so Lecturer and Dept are partially dependent on the primary key
- R is in 1NF but not in 2NF

1NF to 2NF

- Identify the primary key(s) for the 1NF relation.
- Identify the functional dependencies in the relation.
- If partial dependencies exist on the primary key, remove them by placing attributes of the corresponding full FD in a new relation and leave the its determinant in the original table.

1NF

Module	Dept	Lecturer	Text
M1	D1	L1	T1
M1	D1	L1	T2
M2	D1	L1	T1
M2	D1	L1	T3
M3	D1	L2	T4
M4	D2	L3	T1

{Module, Text} → {Lecturer, Dept}
{Module} → {Lecturer, Dept}

2NFa

Module	Dept	Lecturer
M1	D1	L1
M2	D1	L1
M3	D1	L2
M4	D2	L3
M5	D2	L4

2NFb

Module	Text
M1	T1
M1	T2
M2	T1
M2	T3
M3	T4
M4	T1
M4	T5
M1	T6

Problems in 2NF

Look at the table 2NFa

- We cannot add a lecturer who is not assigned with any module. Because module is the primary key.
  - This is a theoretical discussion. Similar issues can be a real problem in some other tables.
- By deleting M3, we lose L2 forever.
- To change the department for L1, we need to change multiple rows manually

2NFa

Module	Dept	Lecturer
M1	D1	L1
M2	D1	L1
M3	D1	L2
M4	D2	L3
M5	D2	L4

Third Normal Form (3NF)

- Based on the concept of transitive dependency.
- A relation that is in 1NF and 2NF and in which no non-key attribute is transitively dependent on the primary key.

2NF to 3NF

- Identify the primary key in the 2NF relation.
- Identify functional dependencies in the relation.
- If transitive dependencies exist on the primary key, remove them by placing them in a new relation along with a copy of their determinant.

2NFa

Module	Dept	Lecturer
M1	D1	L1
M2	D1	L1
M3	D1	L2
M4	D2	L3

{Module} → {Lecturer} → {Dept}

3NFa

Lecturer	Dept
L1	D1
L2	D1
L3	D2
L4	D2

3NFb

Module	Lecturer
M1	L1
M2	L1
M3	L2
M4	L3
M5	L4

Problems Resolved in 3NF

- Problems in 2NF
  - INSERT: Can't add lecturers who teach no modules
  - UPDATE: To change the department for L1 we must alter two rows
  - DELETE: If we delete M3 we delete L2 as well
- In 3NF all of these are resolved (for this relation – but 3NF can still have anomalies!)

3NFa

Lecturer	Dept
L1	D1
L2	D1
L3	D2
L4	D2

3NFb

Module	Lecturer
M1	L1
M2	L1
M3	L2
M4	L3
M5	L4

Transitive Dependency and FK

Let's go back and check the definition of the transitive dependency:

"Transitive dependency describes a condition where A, B, and C are attributes of a relation such that if A → B and B → C, then C is transitively dependent on A via B. Provided that A is not functionally dependent on B or C"

- Translation:

"Provided that B → A or C → A is not true"

Transitive Dependency

Example:

- staffNo (A) → branchNo (B) → bAddress (C)
  - This is transitive dependency.
- LecID (A) → LEmail (B) → LName (C)
  - Not a transitive dependency. Because LEmail is functionally dependent on LecID.

- Why the second example should not be considered as a transitive dependency (should not be split into two tables)?

Transitive Dependency and FK

- LEmail (B) → LecID (A)
  - For each Email address, you can find one LecID.
  - Below are valid values of email and id:
    - Oyo@abc.com → 001
    - Yoy@abc.com → 001

- But LecID is a candidate key, it is not allowed to have duplicates.
  - Thus, for each Email address, you can find a **unique** LecID.

- Thus LEmail and LecID has a 1:1 relationship.

Transitive Dependency and FK

- After splitting them:

Table1: <u>LecID</u>, LEmail

Table2: <u>LEmail</u>, LName

- Table1 and Table2 has 1:1 relationship, with LEmail being the foreign key.
- You have learned E/R modelling, this is not worth splitting.

Transitive Dependency and FK

LecID (A) → LEmail (B) → LName (C)

- The confusion comes from the name “transitive”.
- The above dependency chain is indeed “transitive”.
- But it is not the type of “transitive” we are looking for.

- The type of transitive dependencies we are looking for should support **relationships, or foreign keys**.

Normalisation: Practice

Example process of normalising a database

Normalisation Example

- We have a table representing orders in an online store, Each entry in the table represents an item on a particular order.

  {<u>order</u>, <u>product</u>, customer, address, quantity, unitPrice}

  - For example: (001, Laptop, Jianjun, SEB435 UNNC, 1, $500)

- Primary key is {order, product}
- No other candidate key
- Task: Normalise it to 3NF.

Functional Dependencies

- Each order is for a single customer and each customer has a single address.
  - FD1: {order} →{customer, address}
  - FD2: see FD 4 below

- Each product has a single price
  - FD3: {product} →{unitPrice}

- Each order transitively determines address via customer.
  - FD4: {order} → {customer} → {address}

Functional Dependencies

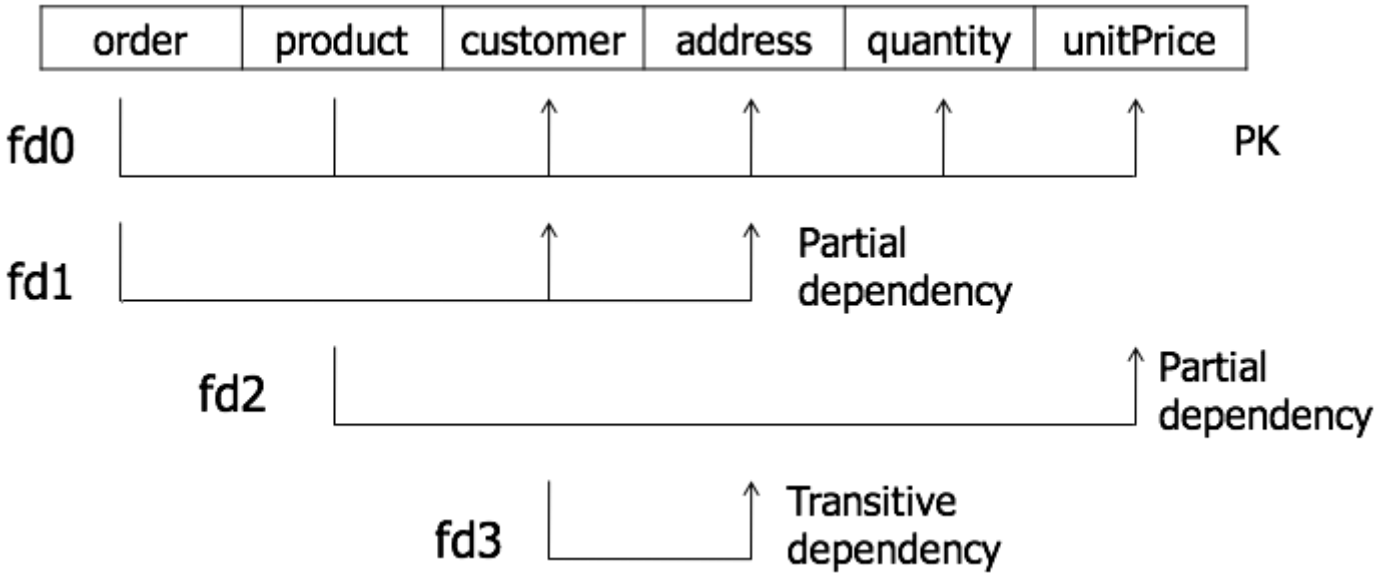

Normalisation to 2NF

2NF: no partial dependencies on candidate keys

{order} → {customer, address}

{product} → {unitPrice}

- To remove the first FD we move {customer, address} to another relation, along with a copy of its determinant, *order*.
  - R1: {<u>order</u>, customer, address}
- With remaining relation
  - R2: {<u>order</u>, <u>product</u>, quantity, unitPrice}

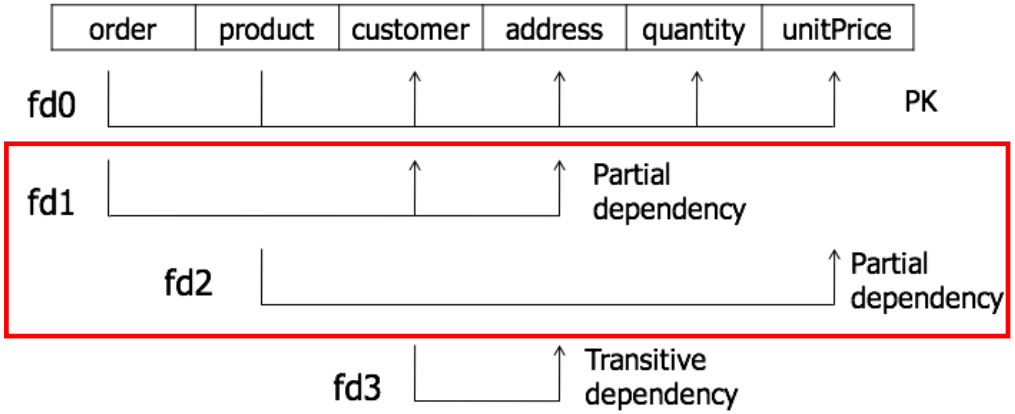

Normalisation to 2NF

Current Tables

R1: {order, customer, address} 2NF

R2: {order, product, quantity, unitPrice}

Next:

- There is a partial FD in R2: {Product} → {UnitPrice}
- To remove this we move it to another relation R3
  - R3: {Product, unitPrice}
- and with remaining relation
  - R4: {order, product, quantity}

Normalisation to 3NF

Current Tables:

R1: {order, customer, address}

R3: {Product, unitPrice} 3NF

R4: {order, product, quantity} 3NF

Next:

- R1 has a transitive FD on its key

- To remove {order} → {customer} → {Address}
- we decompose R1 over
  - R5: {order, customer}
  - R6: {customer, address}

Normalisation

- 1NF:
  - {<u>order, product</u>, customer, address, quantity, unitPrice}
- 2NF:
  - R1: {<u>order</u>, customer, address} 2NF
  - R3: {<u>product</u>, unitPrice} 3NF
  - R4: {<u>order</u>, <u>product</u>, quantity} 3NF
- 3NF:
  - R3: {<u>product</u>, unitPrice} 3NF
  - R4: {<u>order</u>, <u>product</u>, quantity}, 3NF
  - R5: {<u>order</u>, customer} 3NF
  - R6: {<u>customer</u>, address} 3NF

SQL Support

CREATE TABLE AS SELECT …

INSERT INTO SELECT …

SQL Support for Normalisation

- SQL provides sufficient support for normalisations.
- If tables have not been created, you can use CREATE TABLE to build a database that matches your normalisation result.
- If you need to apply normalisation to an existing database with data in its tables, you can do the following:
  - Create new tables that match the results of normalisation.
  - Copy data to these new tables from old tables, using:

```
INSERT INTO SELECT …
```

INSERT INTO SELECT …

- For example, to split the StaffBranch table into staff and branch:
  - CREATE TABLE branch (…);
  - CREATE TABLE staff (…);
  - INSERT INTO branch SELECT DISTINCT branchno, baddress FROM staffbranch;
  - INSERT INTO staff SELECT staffno, …, branchno FROM staffbranch;

StaffBranch

staffNo	sName	position	salary	branchNo	bAddress
SL21	John White	Manager	30000	B005	22 Deer Rd, London
SG37	Ann Beech	Assistant	12000	B003	163 Main St, Glasgow
SG14	David Ford	Supervisor	18000	B003	163 Main St, Glasgow
SA9	Mary Howe	Assistant	9000	B007	16 Argyll St, Aberdeen
SG5	Susan Brand	Manager	24000	B003	163 Main St, Glasgow
SL41	Julie Lee	Assistant	9000	B005	22 Deer Rd, London

CREATE TABLE AS SELECT …

- You may also create staff and branch using the results of SELECT directly.
  - CREATE TABLE branch SELECT DISTINCT branchno, baddress FROM staffbranch
  - CREATE TABLE staff SELECT staffno, …, branchno FROM staffbranch.

- Remember to create the primary keys and foreign keys manually as they are not automatically created.